Teletronics International, Inc.

2 Mbps Access Point
Access Point Configuration

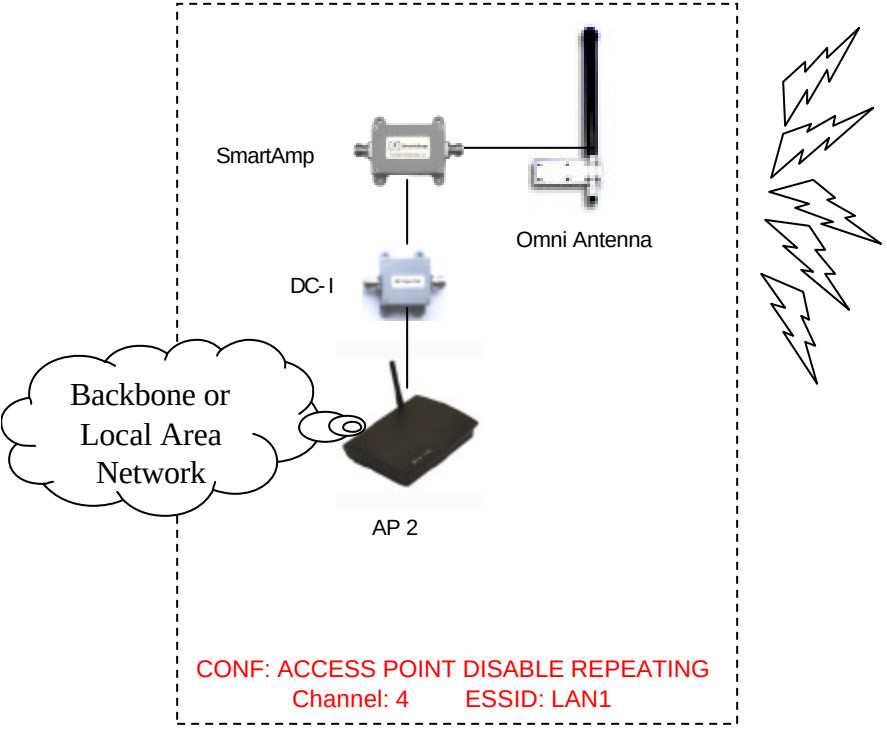

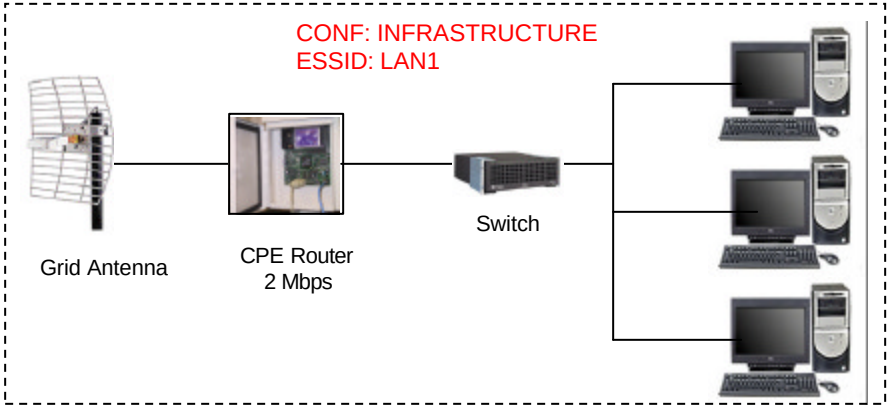

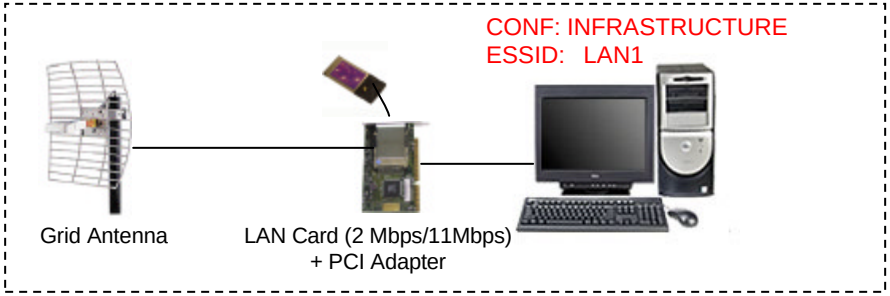

CONF: CONFIGURATION

Teletronics International, Inc.

2 Mbps Access Point
Access Point Enable Repeating Configuration

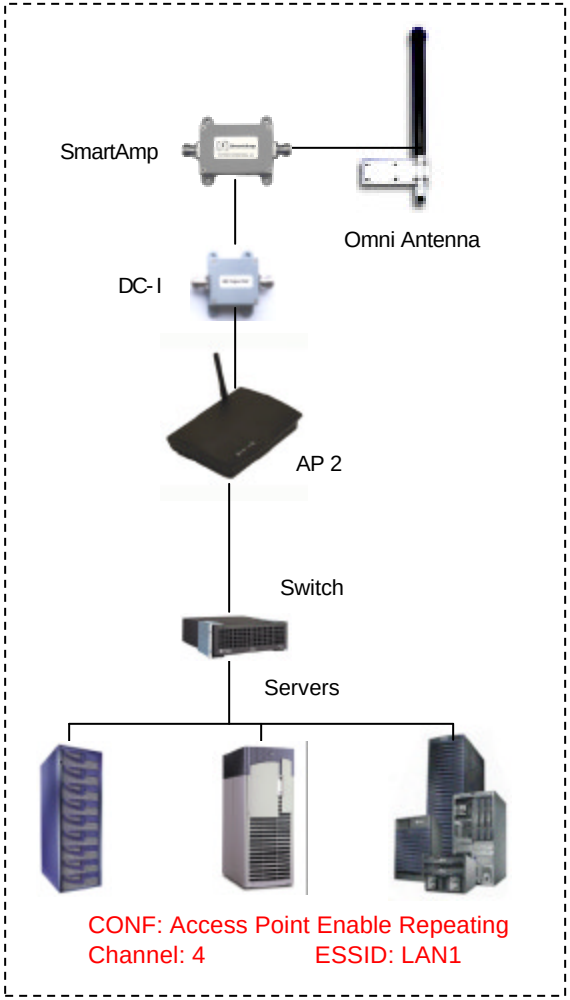

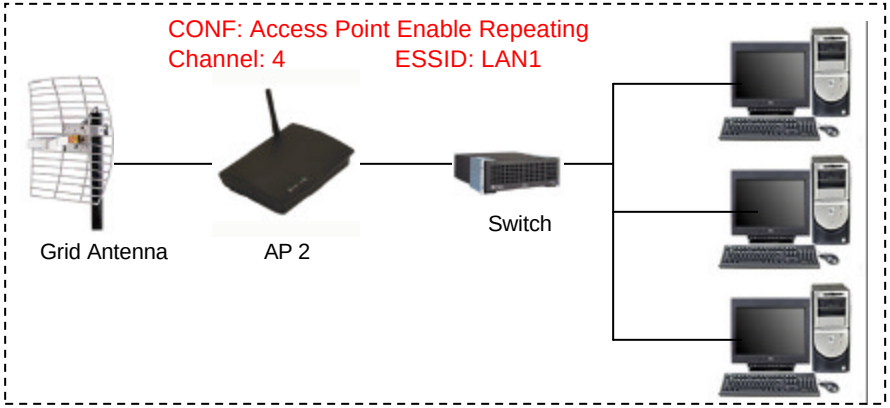

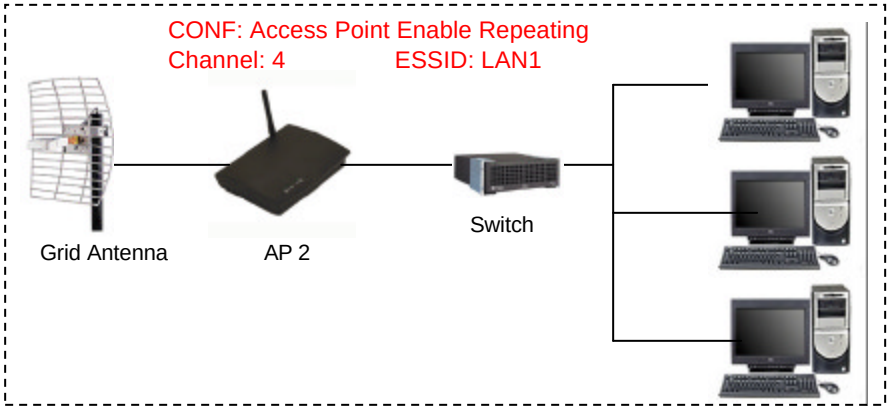

CONF: CONFIGURATION

Teletronics International, Inc.

2 Mbps Access Point ADD-HOC Mode Configuration

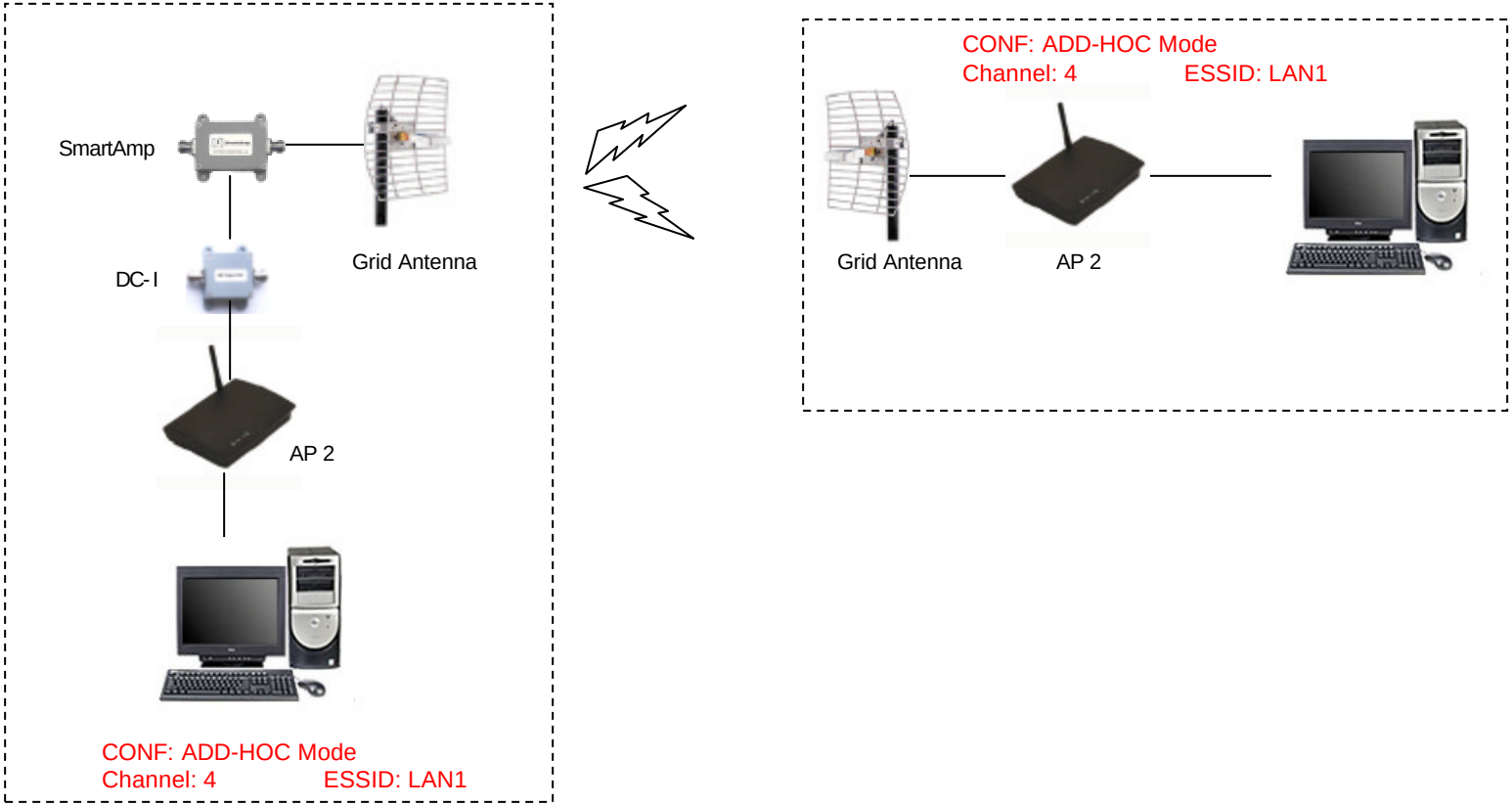

CONF: CONFIGURATION